TRACKS & WHEELS
Registered ISO 9001:2008

P.O. Box 2592, Stn. A 400 Hwy 69 North
Sudbury, Ontario P3A 4S9
Tel: (705) 566-5438
Fax: (705) 566-5422
Hot Line: 1-800-465-5438
Website: www.tracksandwheels.com

MineMaster

232 Drive-In Road
Sault Ste. Marie, Ontario P6B 6A9
Telephone: (705) 256-5438
Facsimile: (705) 256-1451

2200 Riverside Drive RR2
Timmins, Ontario P4R 0A1
Telephone: (705) 268-5438
Facsimile: (705) 268-3382

6 Sunshine Lane
North Bay, Ontario P1B 8G3
Telephone: (705) 840-5438
Facsimile: (705) 474-0717

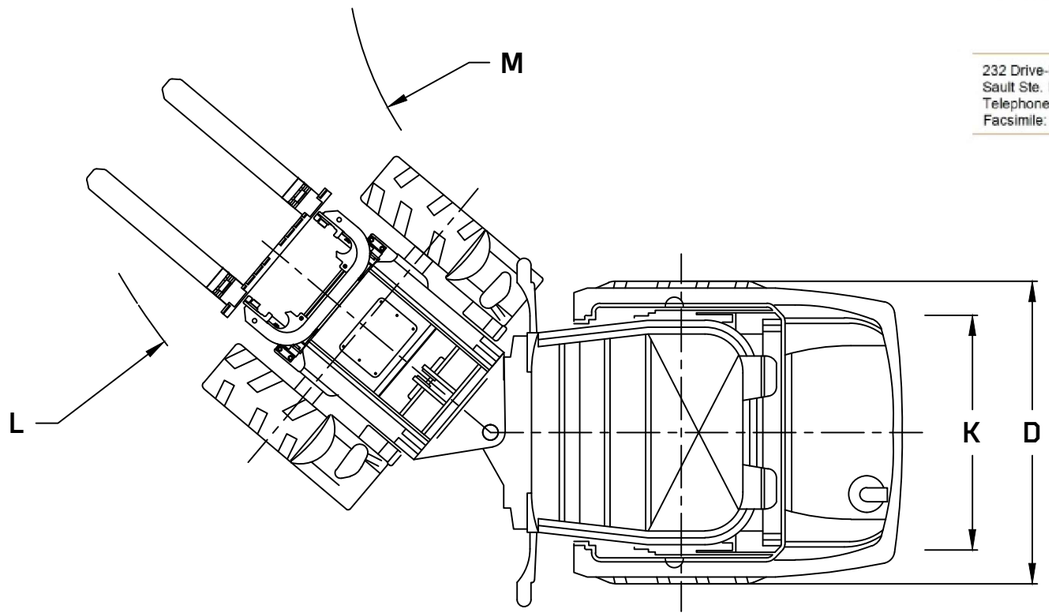

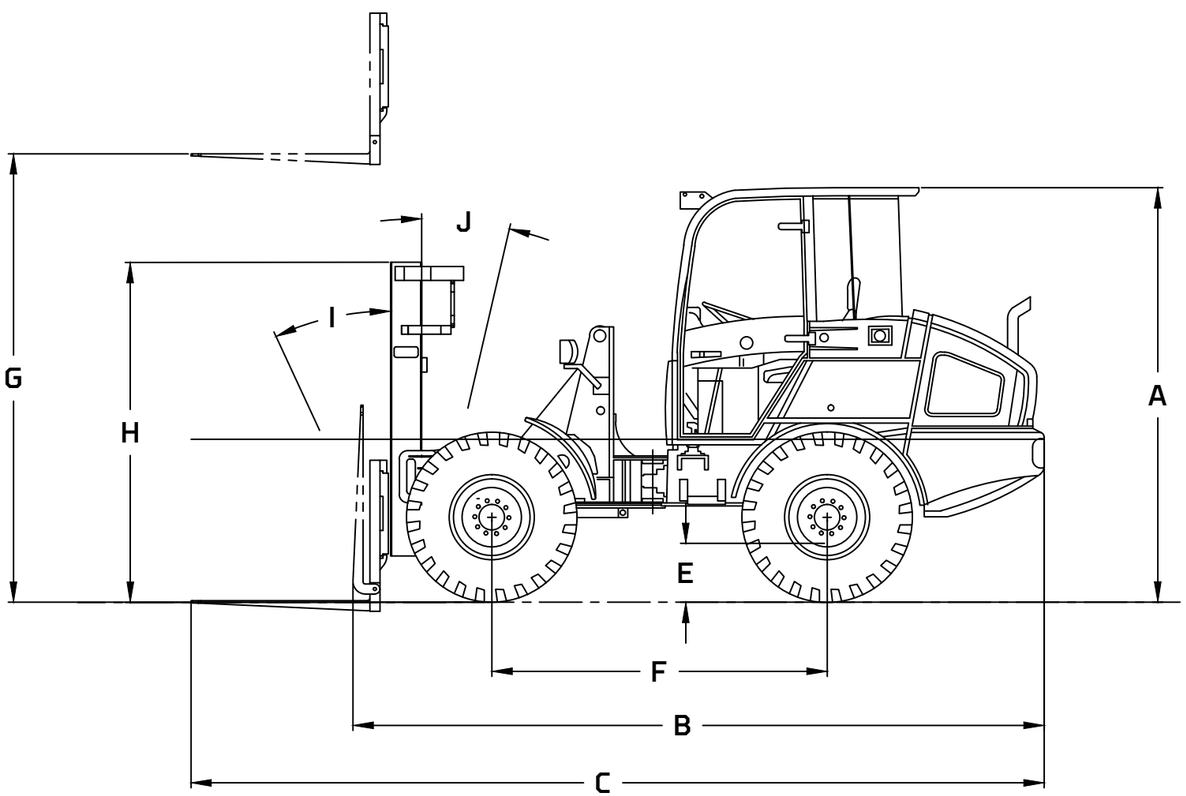

	With Standard Folding Forks	R630 (ROPS / CAB)
A	Overall height	2480 mm (97.64 in.) / 2500 mm (98.43 in.)
B	Overall length (forks folded)	4125 mm (162.4 in.)
C	Overall length (forks down)	5090 mm (200.4 in.)
D	Overall width	1805 mm (71.06 in.)
E	Ground Clearance	350 mm (13.8 in.)
F	Wheelbase	2000 mm (78.74 in.)
G	Lift height	2680 mm (105.5 in.)
H	Retracted height	2007 mm (79.00 in.)
I	Forward tilt	25 deg.
J	Backward tilt	13 deg.
K	Tread	1400 mm (55.12 in.)
L	Turning radius Outer	7763 mm (305.6 in.)
M	Turning radius Inner	3995 mm (157.3 in.)

Capacity	R630
Operating load (PENDING)	8000 lbs (3628 kg) @ 24" load center

Forks	R630
42in. Folding forks, 10in. drop	Standard
48in. Folding forks, 10in. drop	Optional
42in. Solid forks, 10in. drop	Optional
48in. Solid forks, 10in. drop	Optional
42in. Fork Positioner	Optional
48in. Fork Positioner	Optional

DRAWING MODEL FOR REFERENCE ONLY – DIMENSIONS ARE NOTE EXACT

REV.	RELEASE No.	DATE	BY	APP'D

ITEM	PART No.	DESCRIPTION	QTY.

TRACKS & WHEELS
EQUIPMENT BROKERS
566–LIFT 566–5438

UNLESS OTHERWISE SPECIFIED ALL TOLERANCES TO BE AS FOLLOWS:
FRACTIONS = ±1/16
.00 = ±.010
.000 = ±.005
ANGLES = ±1%
FINISH 125
BREAK ALL SHARP EDGES

DRAWING TO BE INTERPRETED AS PER CSA No. B78 78.2

USED ON: R630

DATE: 03/30/2016 | SCALE: 1:18 | NEXT ASS'Y

DRAWN BY: RL | CHECKED: JL | APP'D: JL

MATERIAL: | TITLE: R630–F – OEM (WITH FORKLIFT ADDED) LAYOUT | PART No: L–384 | REV: